1. (20%) 解釋名詞: (a) RAMBUS (b) Bluetooth (c) External hardware exceptions (d) Pipelining (e) Non-Volatile RAM (NVRAM)
2. (15%) 微處理機可以透過哪些方式知道周邊 I/O 裝置需要被服務？微處理機與周邊 I/O 裝置傳輸資料的方式有哪些？請解釋。
3. (15%) Explain the operation of the system shown below. Describe the function of each block.

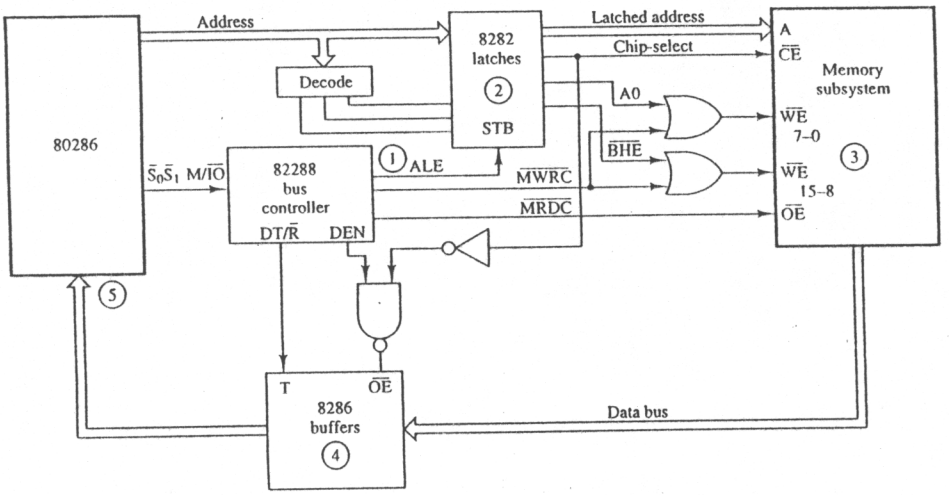

4. (20%) What is the memory interleaving? Explain two-way word-interleaved and doubleword-interleaved methods. Also, explain four-way interleaving technique.
5. (15%) Describe the use of Dynamic Bus Sizing. How to use a pair of control signals to execute dynamic bus sizing?
6. (15%) Describe Intel vectored interrupt structures and Motorola vectored interrupt structures.